SIGN	DATE	DESCRIPTION	APPROVER
1			
		THIS IS CAD DRAWING, DO NOT REVISE MANUALLY!!!	

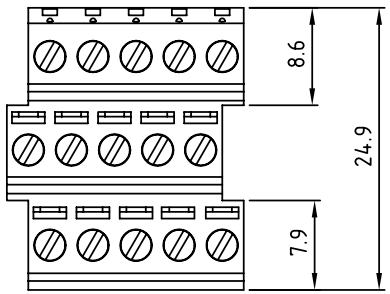

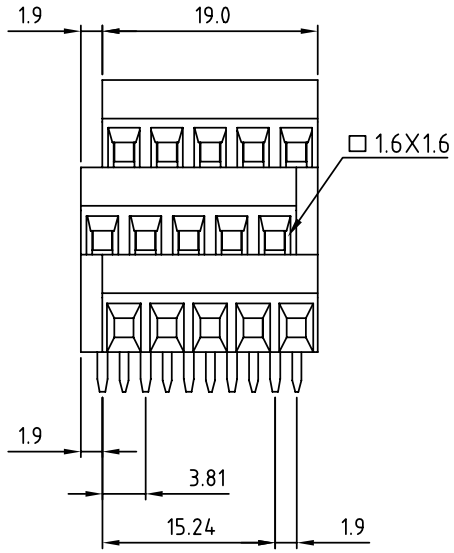

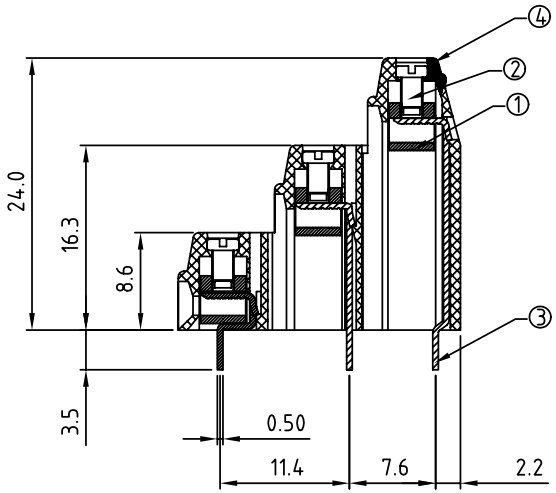

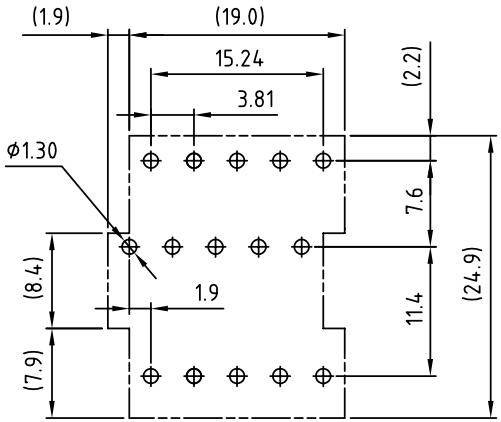

P.C.B LAYOUT

Material

- Item 1 Clamp : Brass , Ni plated
- Item 2 Terminal screw: Steel Zinc plating "-" slot type
- Item 3 Wire guard solder pin :Brass ,Tin plated
- Item 4 Terminal housing : Thermoplastic (UL94V-0)

Electrical

- Voltage rating: 300VAC
- Current rating: 10A
- Wire range:
- Solid wire(AWG): 16-24
- Stranded wire(AWG): 16-24
- Torque: 1.7Lb-In
- Screw: M2
- Wire strip length: 5-6mm
- Withstanding Voltage: 1.3KV
- Operating temperature: -40°C to +115°C
- Soldering temperature: 250°C±10°C/5 Sec

ANYTEK

CUSTOMER COPY

ALL RIGHTS RESERVED. REPRODUCTION OR ISSUE TO THIRD PARTIES IN ANY FORM WHATEVER IS NOT PERMITTED WITHOUT WRITTEN AUTHORITY FROM THE PROPRIETOR. PROPERTY OF ANYTEK TECHNOLOGY CO., LTD

TITLE	YA 3.81 Series 15p(5p×3)					
PART NO.	YA1521x00000G			DWG NO.	8YA0001	
APPROVED	CHECKED	DESIGNED	DRAWN	CUST NO.		Tolerance
	Marvin 2005.12.01	Marvin 2005.12.01	Marvin 2005.12.01		UNIT: mm	X. ±0.50
					SCALE: NONE	X.X ±0.30
				SHEET: 01/01	REV.: B	X.XX ±0.10
						X° ±1°